Accurate Lock and Hardware Co.

Manufactures of
Custom Locks and Architectural Hardware

Annie Place, Stamford, CT. 06902
(203) 348-8865 FAX (203) 348-5234
E-MAIL: Sales@Accuratelockandhardware.com
www.Accuratelockandhardware.com

9000 Series

Mortise Lock Installation Template
All BackSets

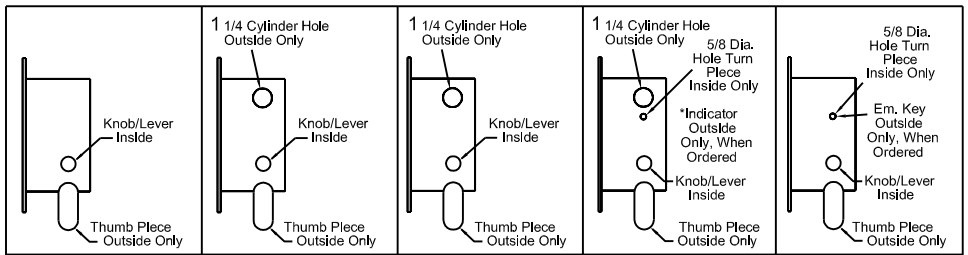

FIG. 2		FIG. 3		FIG. 4		FIG. 5		FIG. 6	
9025		9045		9022		9024		9039	
		9056		9042		9034			
		9059				9048			
						9067			

Find Catalog Numbers Which Will Show Cutouts For Functions Desired. Refer To Composite Template Above For Locations And Sizes Of Holes.

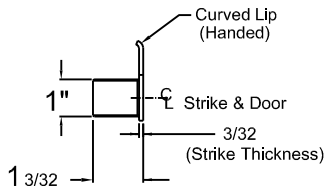

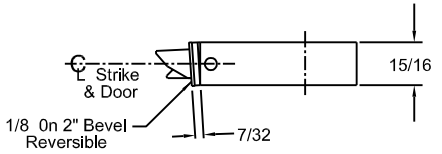

Insert BackSet As Req'd.
2-1/2", 2-3/4", 3-3/4"
5" or 6"

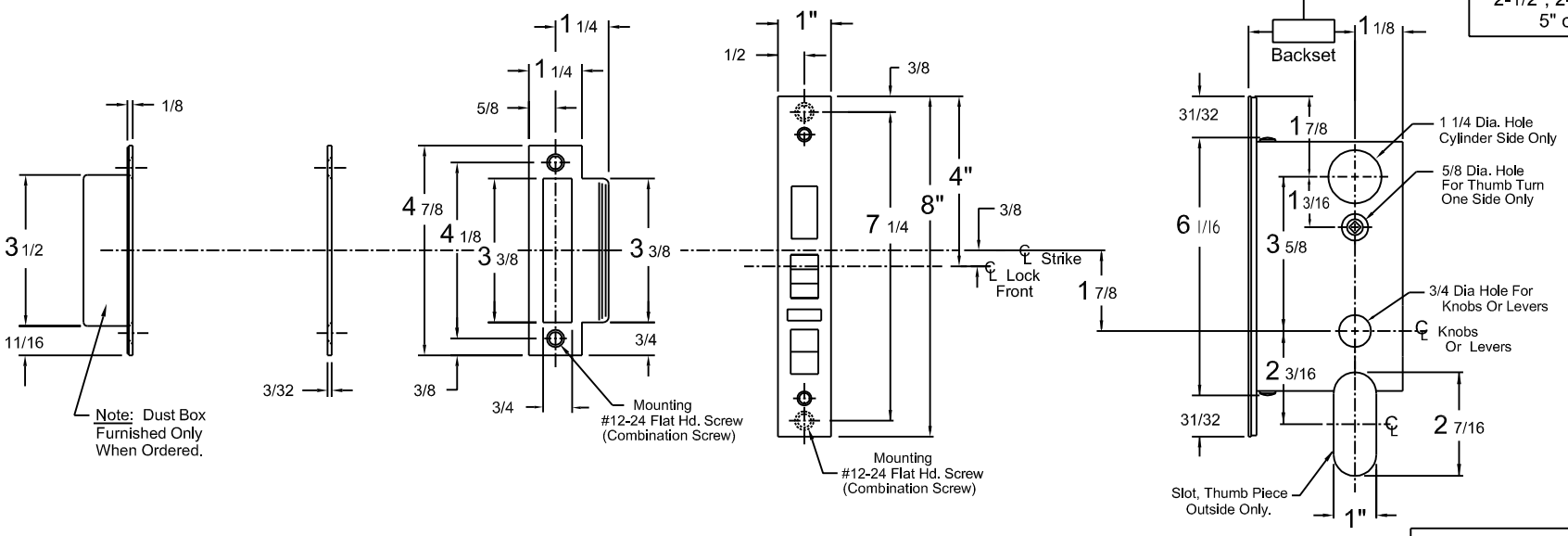

CAUTION
THUMB PIECE HOLE
Adjust Dimensions To Agree With Trim Being Used.

THUMB PIECE x KNOB / LEVER

9000 SERIES

Responsibilty
Door And Frame Manufactures Are Responsible For Providing Adequate Construction Or Re-Inforcement For Proper Installation Of Hardware Shown.

DWG. NO.	REV
9000TPxL-TEMP	11/9/08

FILE NAME: F:\JERRY08\ACCURATE\9100\9000-BLANKTEMP