Accurate Lock and Hardware Co.
Manufacturers of
Custom Locks and Architectural Hardware

Annie Place, Stamford, CT. 06902
(203) 348-8865 FAX (203) 348-5234
E-MAIL: Sales@Accuratelockandhardware.com
www.Accuratelockandhardware.com

8600- 1 3/4 Backset

Mortise Lock Installation Template

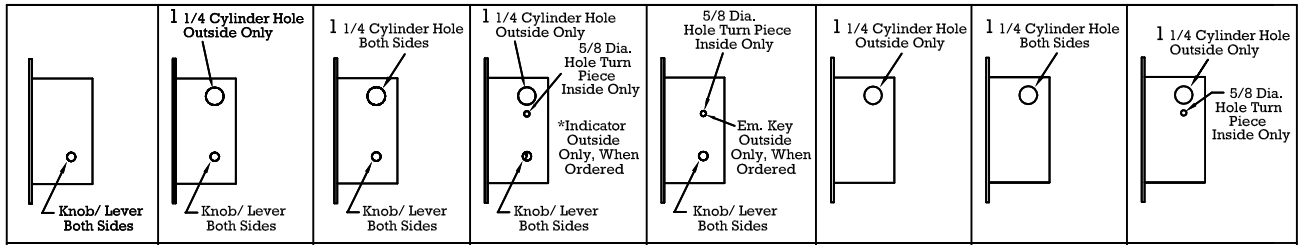

FIG. 2	FIG. 3	FIG. 4	FIG. 5	FIG. 6	FIG. 7	FIG. 8	FIG. 9
8625	8656	8622	8624	8639	8601	8602	8603
	8659		8648				

Find Catalog Numbers Which Will Show Cutouts For Functions Desired. Refer To Composite Template Above For Locations And Sizes Of Holes.

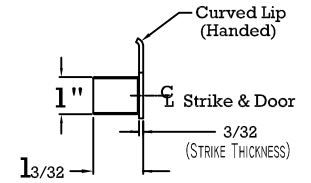

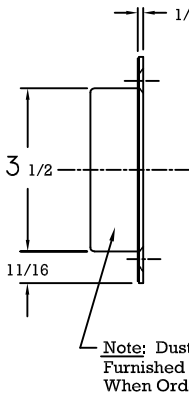

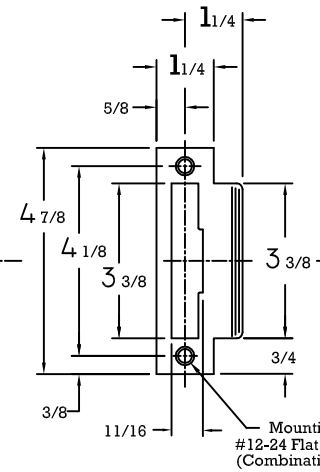

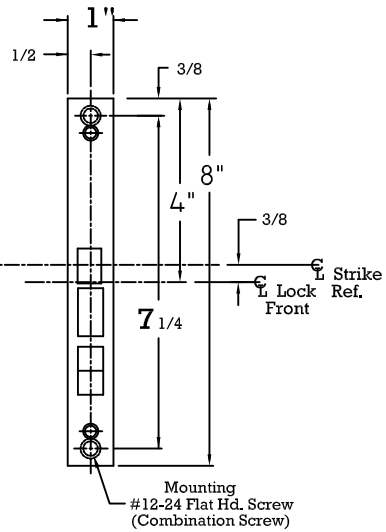

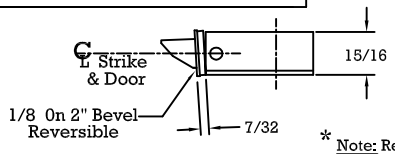

* Note: Refer To Above Function Chart For Req'd Hole Prep.

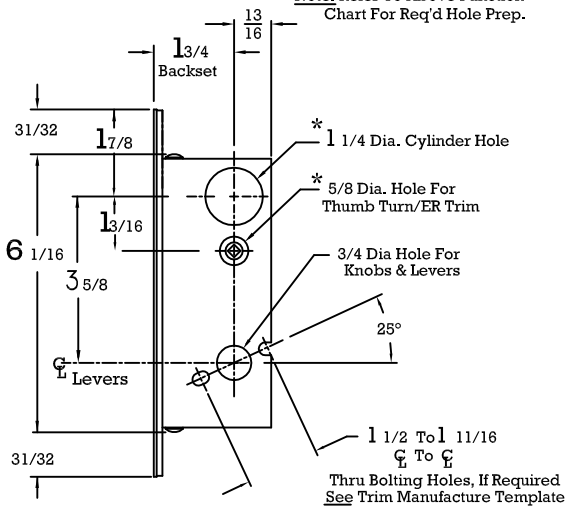

LEVER x LEVER

8600 SERIES

1 3/4 BACKSET

Responsibilty
Door And Frame Manufactures Are Responsible For Providing Adequate Construction Or Re-Inforcement For Proper Installation Of Hardware Shown.

DWG. NO.	REV
8600-1750TEMP	10/6/08

FILE NAME: F:\JERRY08\ACCURATE\8600\8500-TEMPLATES
F:/WEBFILES/TEMPLATES/8600/8600LxL-1750TEMP