Accurate Lock and Hardware Co.

Manufacturers of
Custom Locks and Architectural Hardware

Annie Place, Stamford, CT. 06902
(203) 348-8865 FAX (203) 348-5234
E-MAIL: Sales@Accuratelockandhardware.com
www.Accuratelockandhardware.com

8500- 1 1/4 Backset

Mortise Lock Installation Template

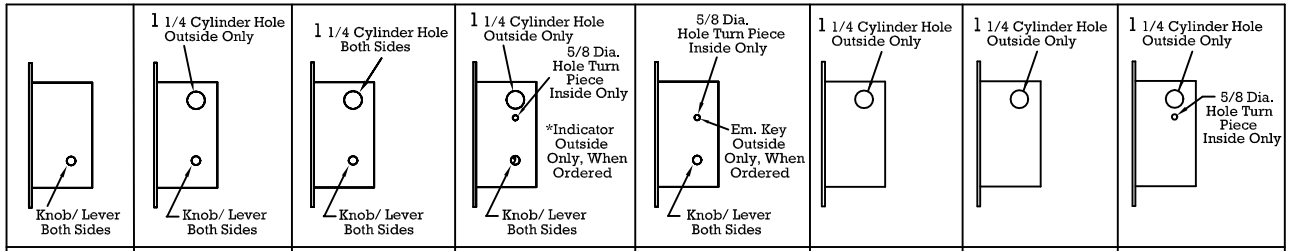

FIG. 2	FIG. 3	FIG. 4	FIG. 5	FIG. 6	FIG. 7	FIG. 8	FIG. 9
8525	8556	8522	8524	8539	8501	8502	8503
	8559		8548				

Find Catalog Numbers Which Will Show Cutouts For Functions Desired. Refer To Composite Template Above For Locations And Sizes Of Holes.

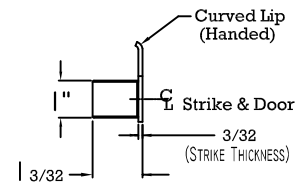

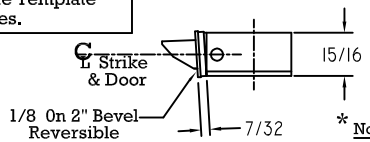

* Note: Refer To Above Function Chart For Req'd Hole Prep.

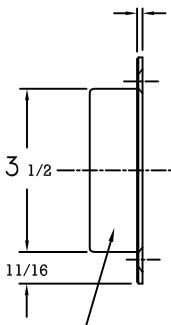

Note: Dust Box Furnished Only When Ordered.

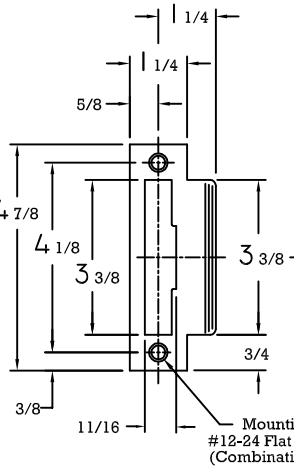

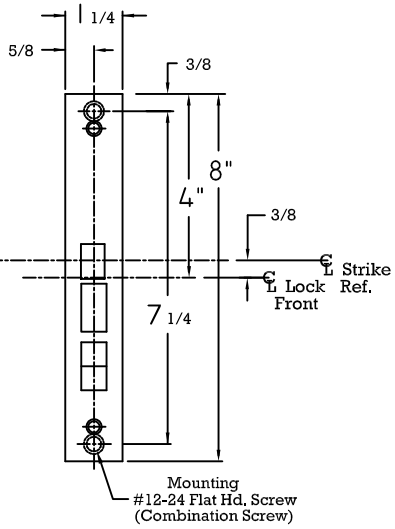

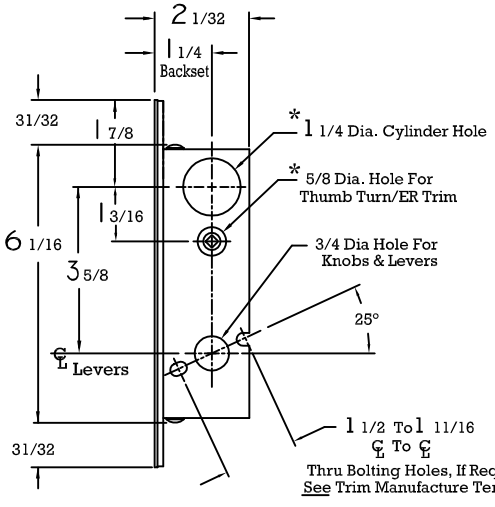

LEVER x LEVER
8500 SERIES
1 1/4 BACKSET

Responsibilty
Door And Frame Manufactures Are Responsible For Providing Adequate Construction Or Re-Inforcement For Proper Installation Of Hardware Shown.

DWG. NO.	REV
8500-1250TEMP	10/6/08

FILE NAME: F:\JERRY08\ACCURATE\8600\8500-TEMPLATES
F:/WEBFILES/TEMPLATES/8600/8500LxL-1250TEMP